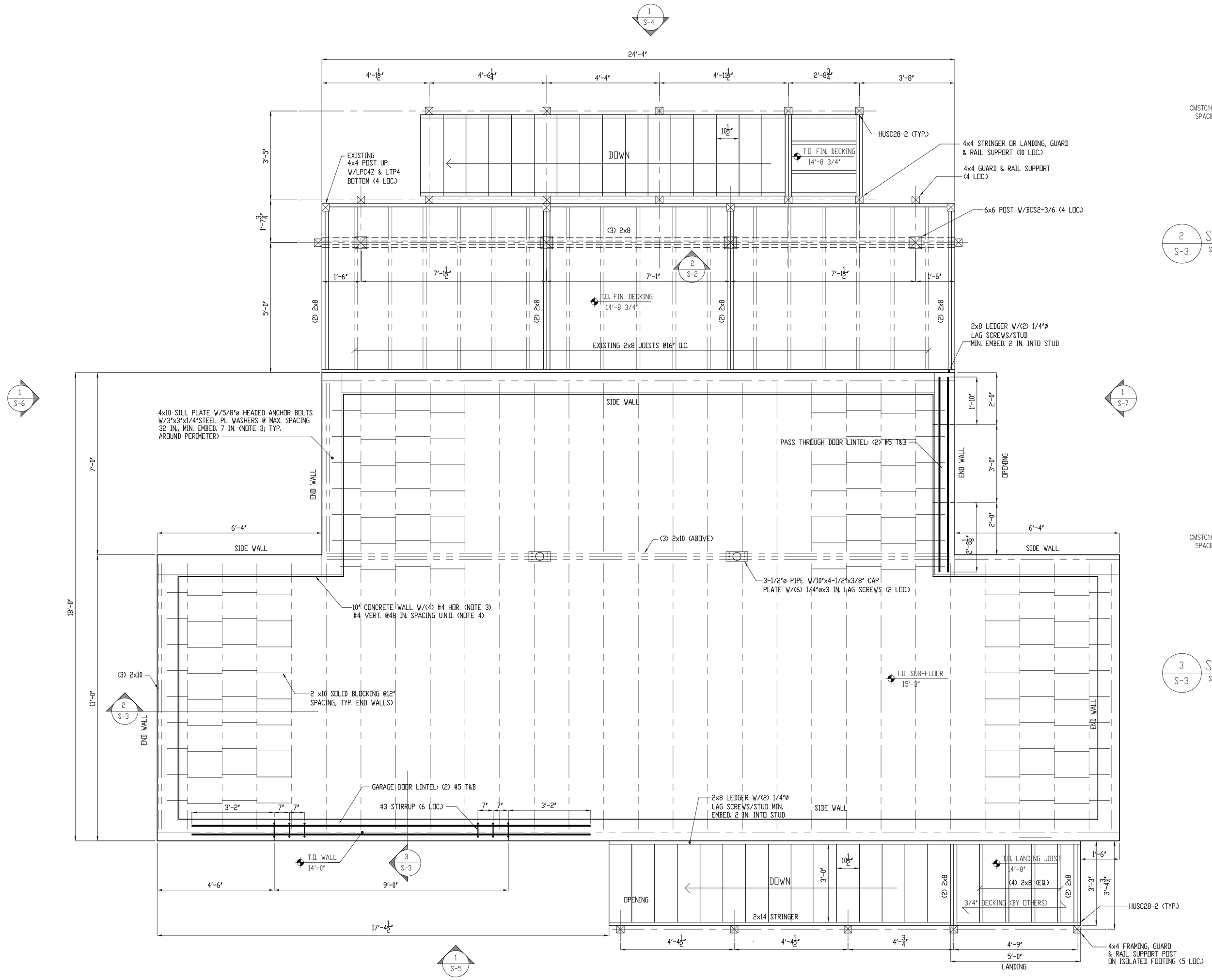

1 S-3 PLAN: TOP OF FOUNDATION

SCALE: 1/2"=1'-0"

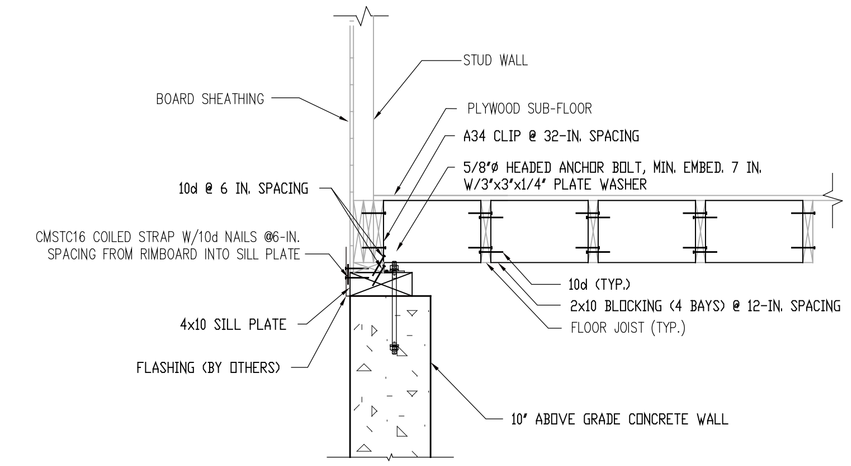

2 S-3 SECTION: EXISTING TIMBER FRAME WALL ANCHORAGE TO CONCRETE END WALL

SCALE: 3/4"=1'-0"

NOTES:
1. MOST EXISTING FRAMING WAS CONCEALED WHEN THESE PLANS WERE CREATED. FIELD VERIFY EXISTING FRAMING WHEN EXPOSED TO ENSURE CONNECTIONS CAN BE MADE AS SHOWN TO TRANSFER LATERAL LOADS FROM STUD WALL BOTTOM AND UPPER CONCRETE WALL TO FLOOR DIAPHRAGM.
2. SUB-FLOOR SHEATHING TO JOIST NAILING ASSUMED TO MEET IRC CODE MINIMUM OF (1) 6d W/12 IN. SPACING AND DETERMINE BLOCKING REQUIREMENTS.

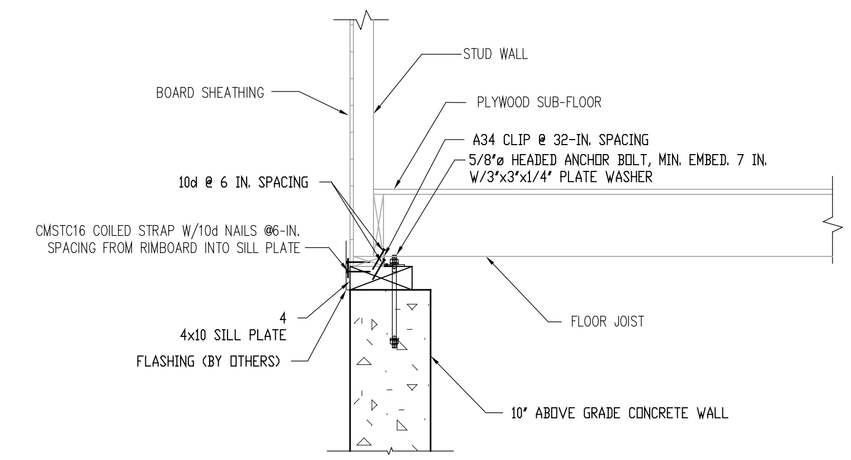

3 S-3 SECTION: EXISTING TIMBER FRAME WALL ANCHORAGE TO CONCRETE SIDE WALL

SCALE: 3/4"=1'-0"

NOTES:
1. MOST EXISTING FRAMING WAS CONCEALED WHEN THESE PLANS WERE CREATED. FIELD VERIFY EXISTING FRAMING WHEN EXPOSED TO ENSURE CONNECTIONS CAN BE MADE AS SHOWN TO TRANSFER LATERAL LOADS FROM STUD WALL BOTTOM AND UPPER CONCRETE WALL TO FLOOR DIAPHRAGM.
2. SUB-FLOOR SHEATHING TO JOIST NAILING ASSUMED TO MEET IRC CODE MINIMUM OF (1) 6d W/12 IN. SPACING AND DETERMINE BLOCKING REQUIREMENTS.

PLAN NORTH

NOTES:
1. FIELD VERIFY ALL DIMENSIONS.
2. #5 LAP SPLICES MIN. 38 IN., DEVELOPMENT LENGTH 28 IN.
3. SUBSTITUTE WIDER PLATES IF REQUIRED TO PROVIDE H2.5A JOIST TO PLATE CONNECTION.
4. GUARDS AND RAILS NOT SHOWN; SEE ELEVATIONS, SECTIONS, AND AWC PUB 6.
5. DECK ROOF FRAMING CONNECTIONS TO BE DETERMINED AFTER ROOF FRAMING IS EXPOSED.
6. AUGMENT EXISTING DECK JOISTS AS REQUIRED; RE-USE EXISTING DECK FRAMING AND BOARDING WHERE POSSIBLE.
7. SHIM LPC CONNECTORS AS REQUIRED.

PROJECT:
BARIS RESIDENCE
11 HARRIS AVENUE
WARWICK, RI

JOB NUMBER: 15-064

AQUIDNECK CONSULTING ENGINEERS, LLC
STRUCTURAL ANALYSIS AND DESIGN
ADMIRAL'S GATE TOWER, 3RD FLOOR
221 THIRD STREET, BOX 16
NEWPORT, RI 02840
P. 401/846-8844

DATE: 01-28-2016
REVISIONS: -

TOP OF CONCRETE WALL

THIS DOCUMENT CONTAINS CONFIDENTIAL OR PROPRIETARY INFORMATION OF AQUIDNECK CONSULTING ENGINEERS, LLC. NEITHER THIS DOCUMENT NOR THE INFORMATION HEREIN IS TO BE USED OR DISCLOSED EITHER IN WHOLE OR IN PART, EXCEPT AS AUTHORIZED BY AQUIDNECK CONSULTING ENGINEERS, LLC.

ISSUED FOR CONSTRUCTION

S-3